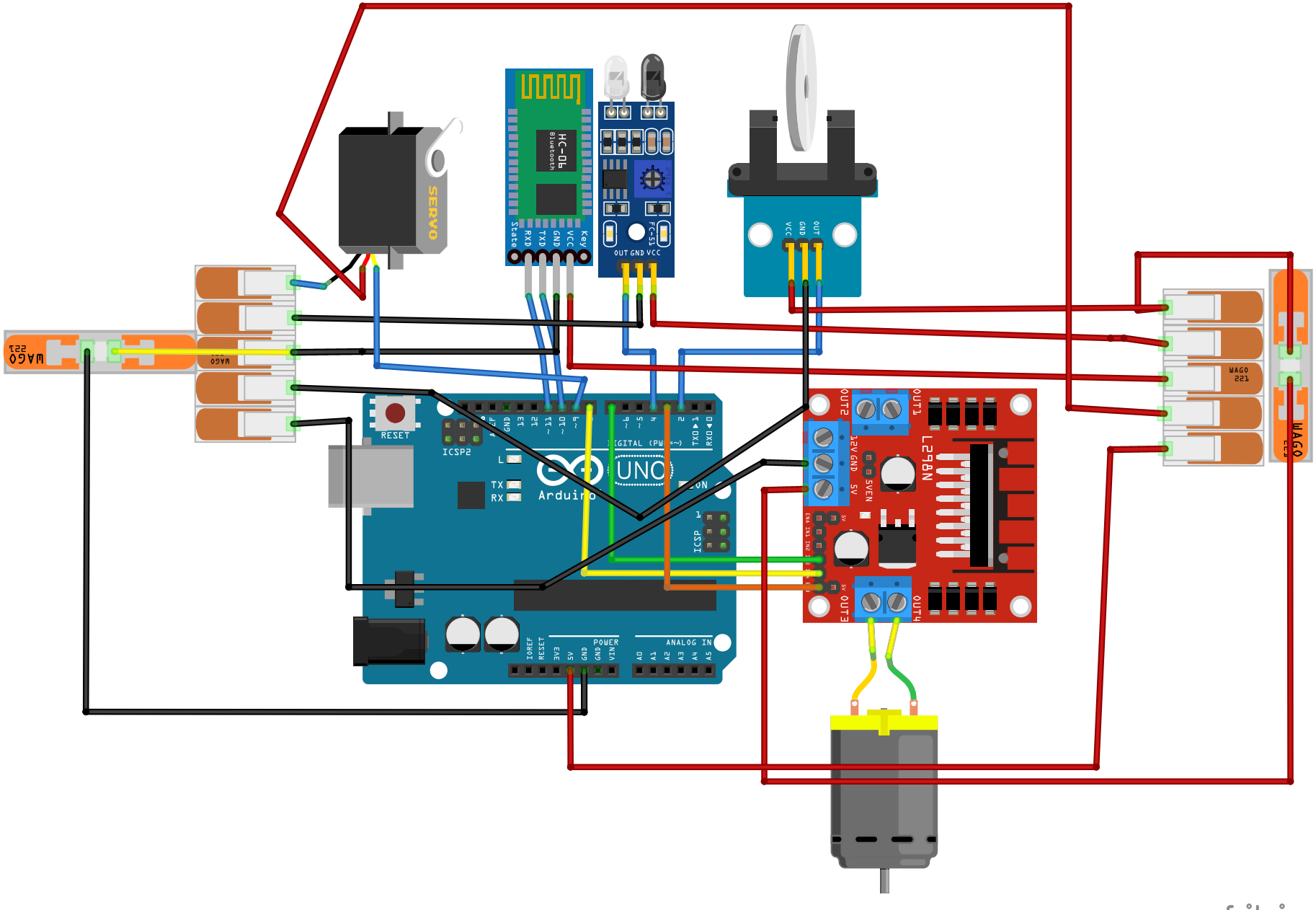
SERVO
HC-05
Bluetooth
State
RXD
TXD
GND
VCC
Key
OUT GND VCC
VCC GND OUT
WAGO
221
RESET
ICSP2
UNO
Arduino
DIGITAL (PWM~)
ICSP
POWER
ANALOG IN
L298N
OUT1
OUT2
OUT3
OUT4
12V GND 5V
5VEN
ENA IN1 IN2 IN3 IN4 ENB

fritzing